OFF
A

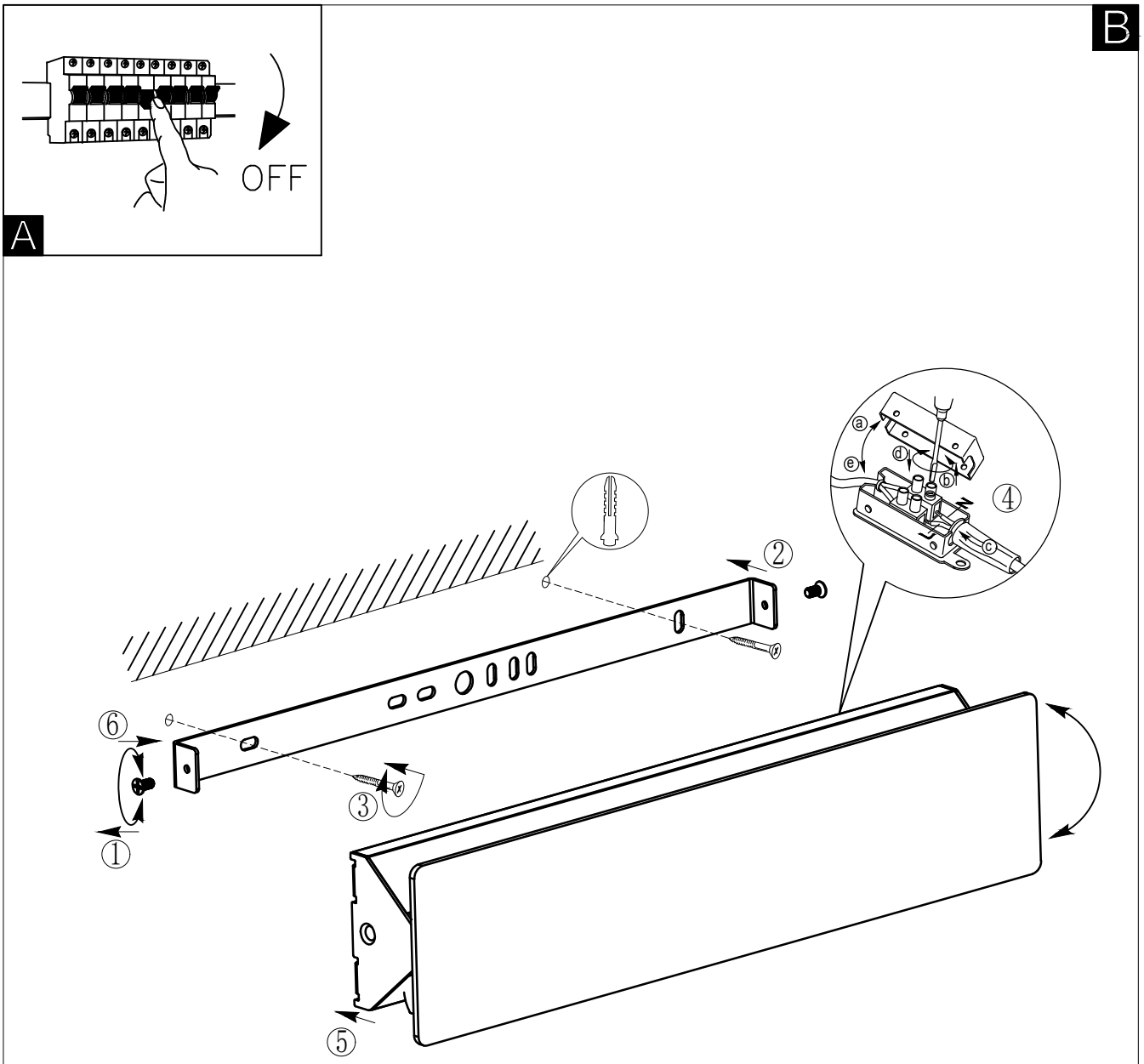
B
①
②
③
④
⑤
⑥
ⓐ
ⓑ
ⓒ
ⓓ
ⓔ
N
L

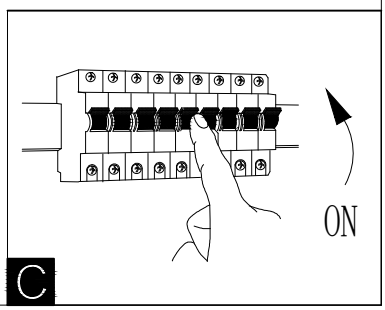
ON
C