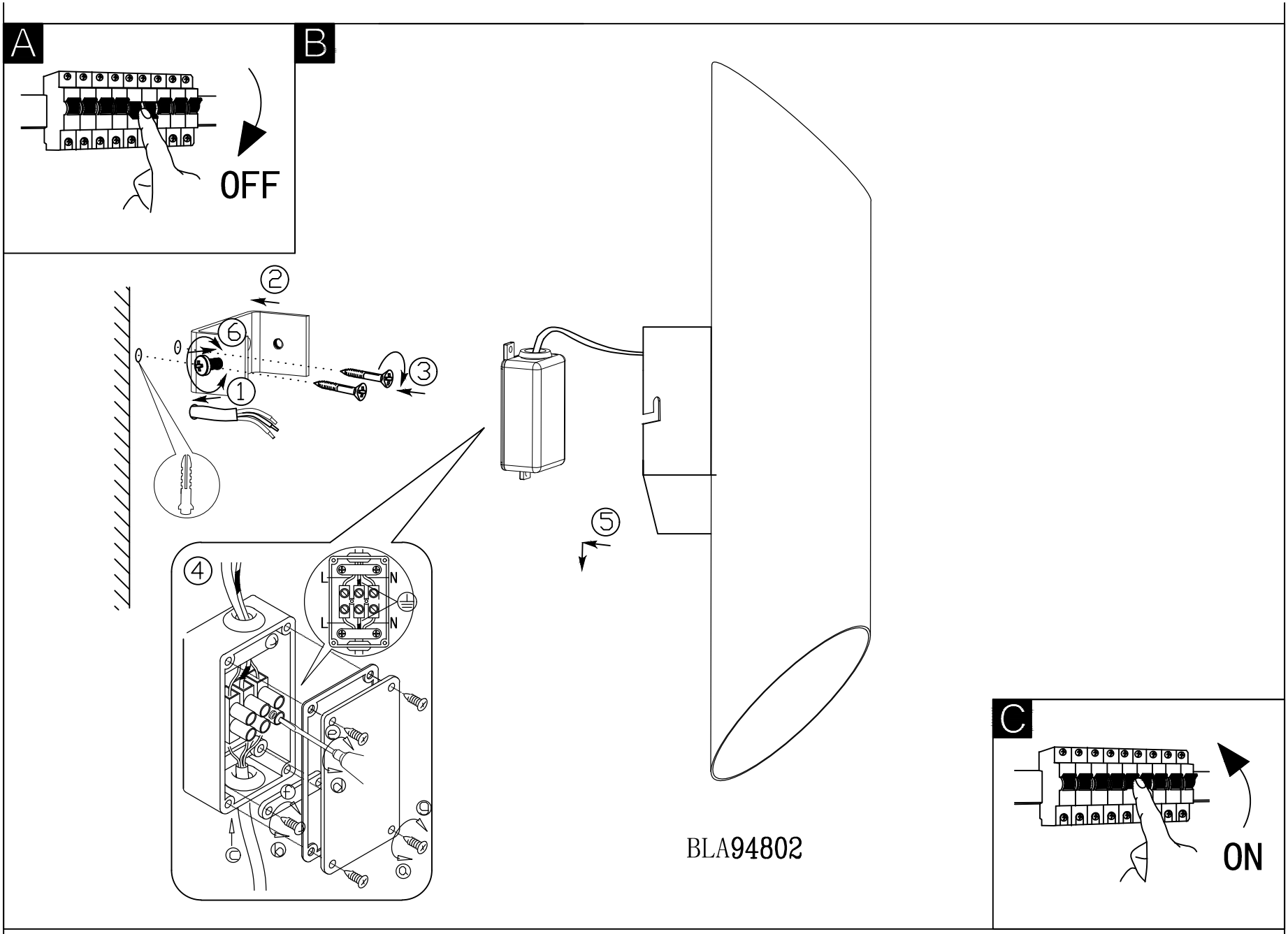
A
OFF
B
②
⑥
①
③
④
L
N
L
N
⑤
BLA94802
C
ON