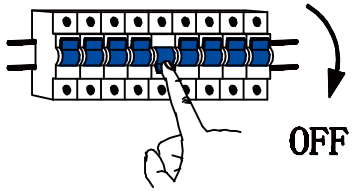

A

B

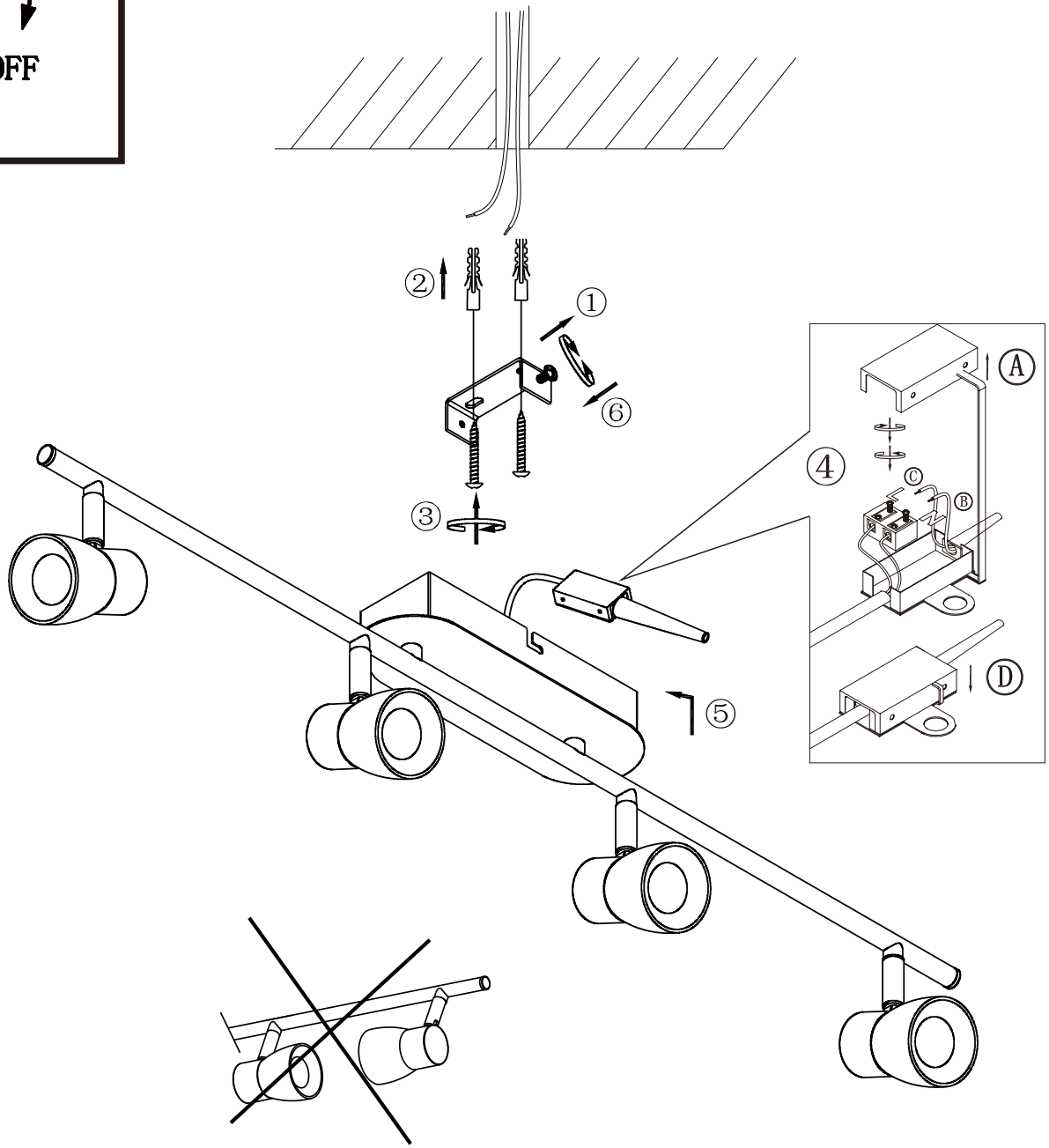

94383

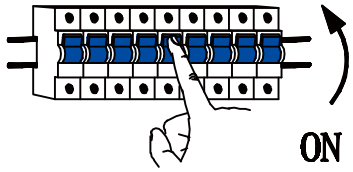

C