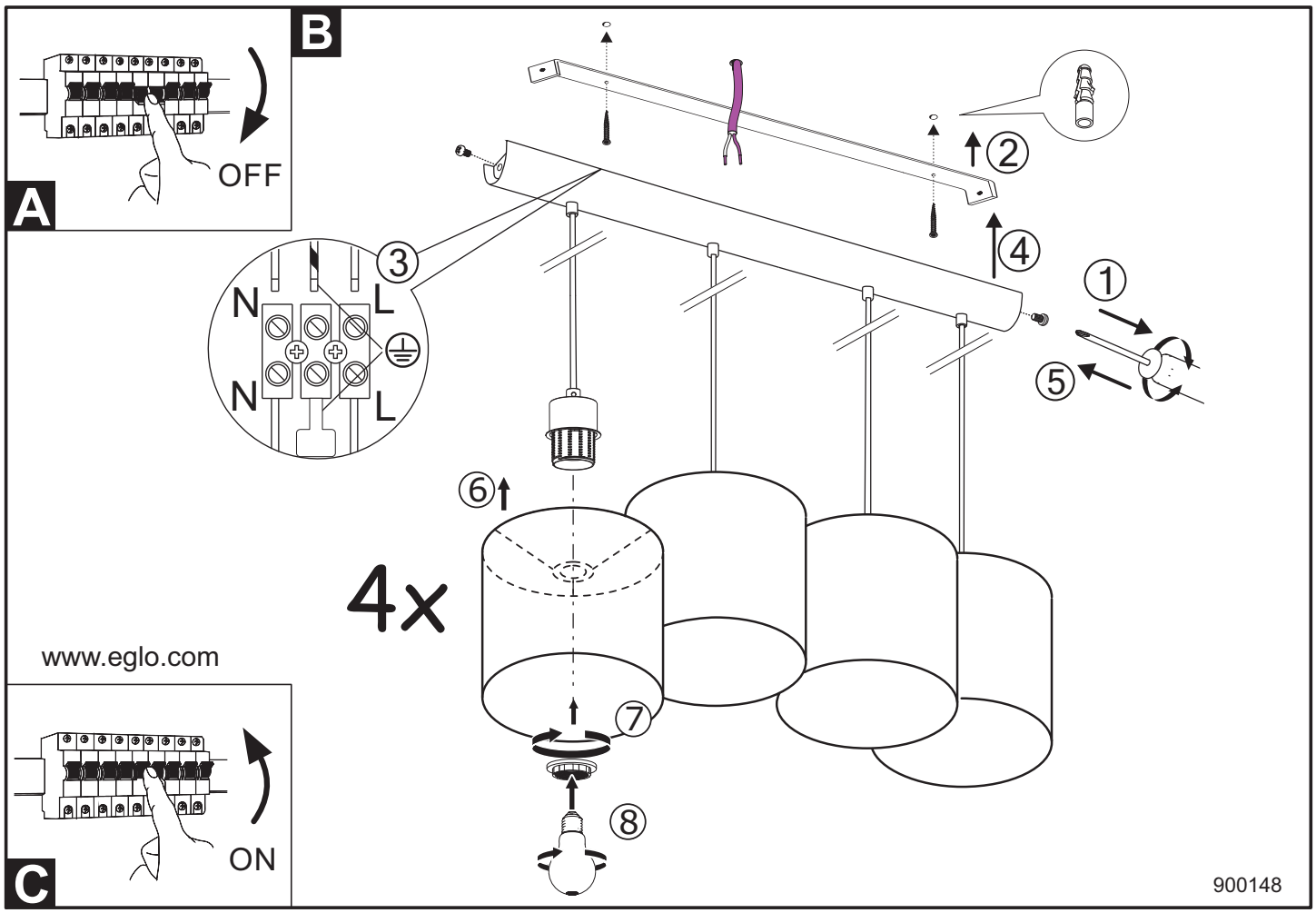
B
A
OFF
N
L
N
L
3
2
4
1
5
6
4x
7
8
www.eglo.com
C
ON
900148

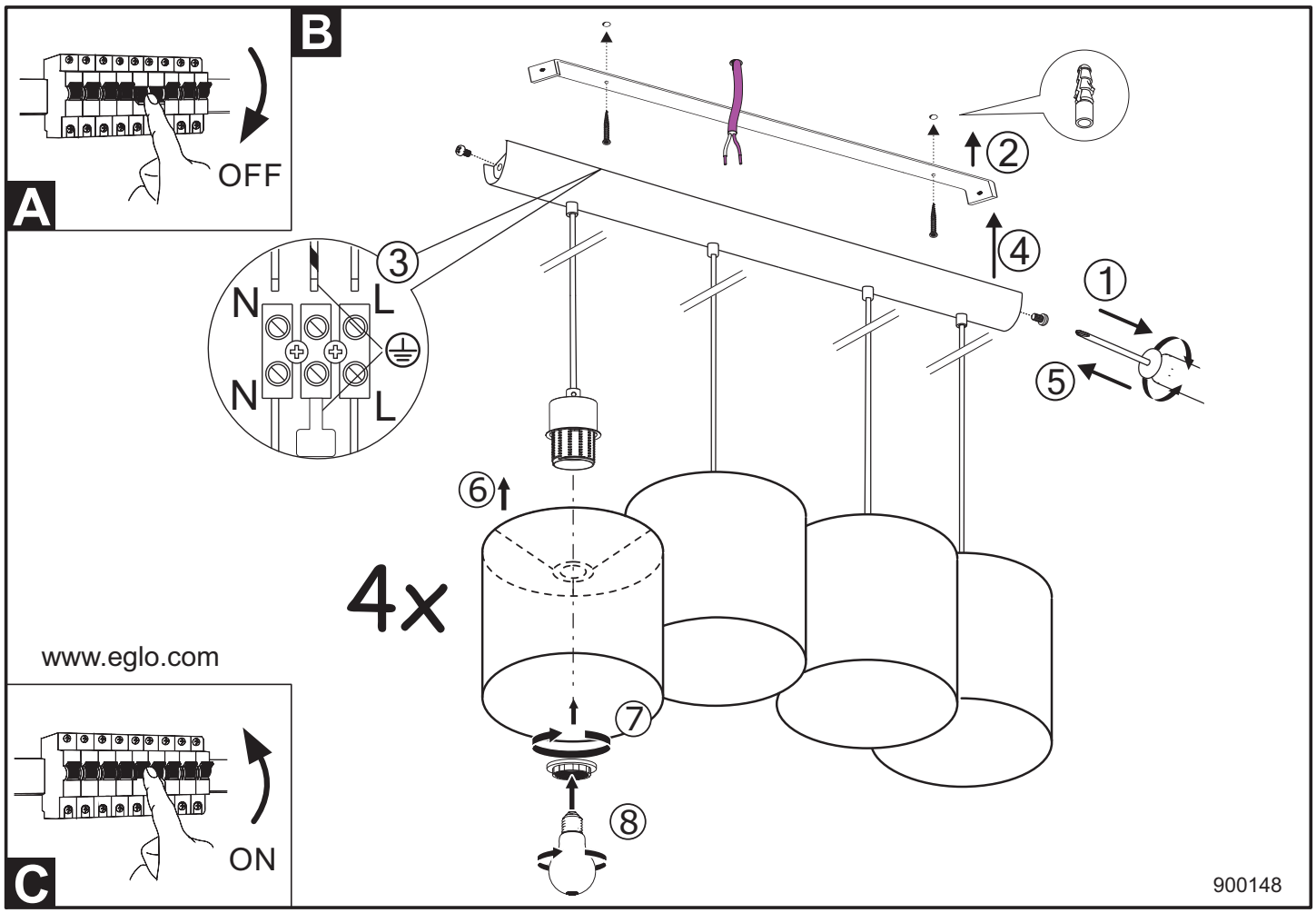
B
A
OFF
N
L
N
L
3
2
4
1
5
6
4x
7
8
www.eglo.com
C
ON
900148