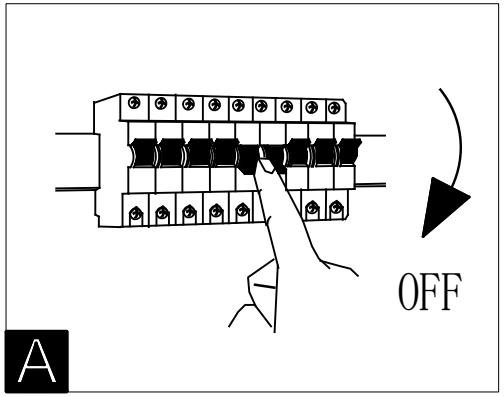
OFF
A

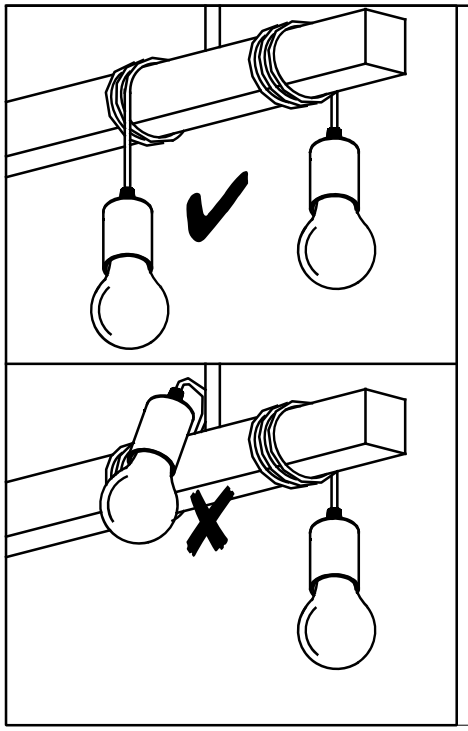

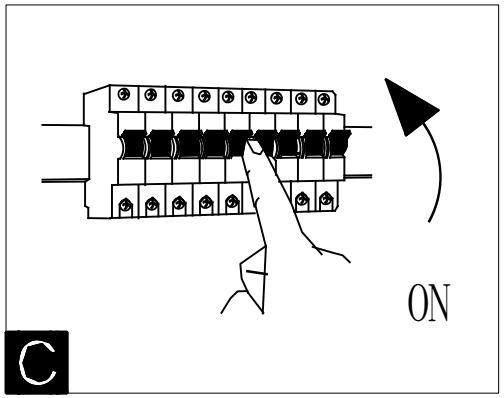
ON
C

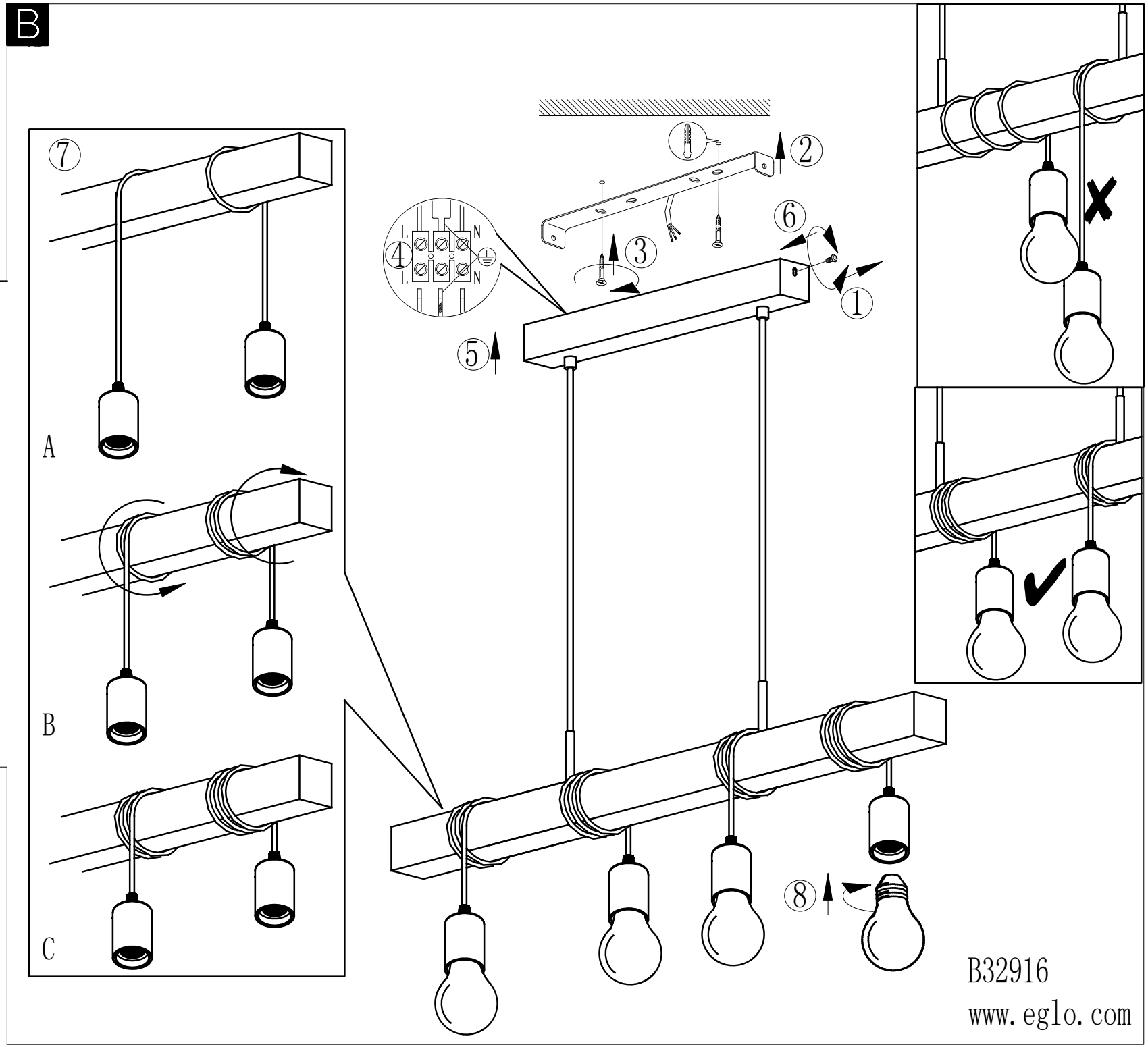
B
7
A
B
C
L
N
L
N
4
5
3
2
6
1
8
B32916
www.eglo.com